KALMAR - TERMINAL WEST FORKS 16T

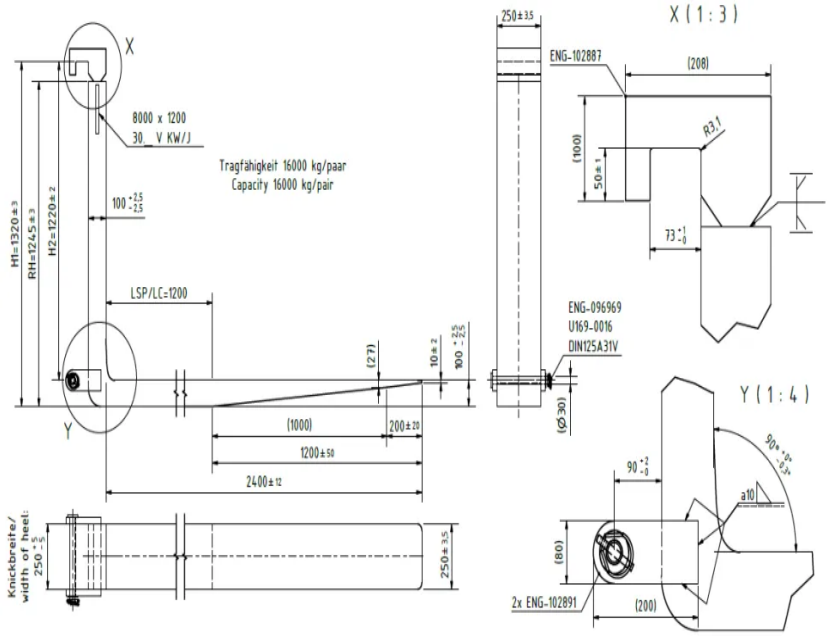

KEY SPECIFICATIONS

FLC	AT.06.0161V7
Brand	Kalmar
Model	
Category	Kalmar

SPECIFICATIONS

FLC	AT.06.0161V7	Fork length	2400 mm
Year	2025	Extra info	2501002400TWS-1011, article No: AT.06.0161V7, Kalmar TWS fork 250 x 100 x 2400, H1=1320, 16t / Taper is 1200 mm
Capacity	16000 kg		

See full details on our website

© 2025 Forkliftcenter English all rights reserved

ISO 9001
ISO 14001
ISO 45001
BUREAU VERITAS
Certification